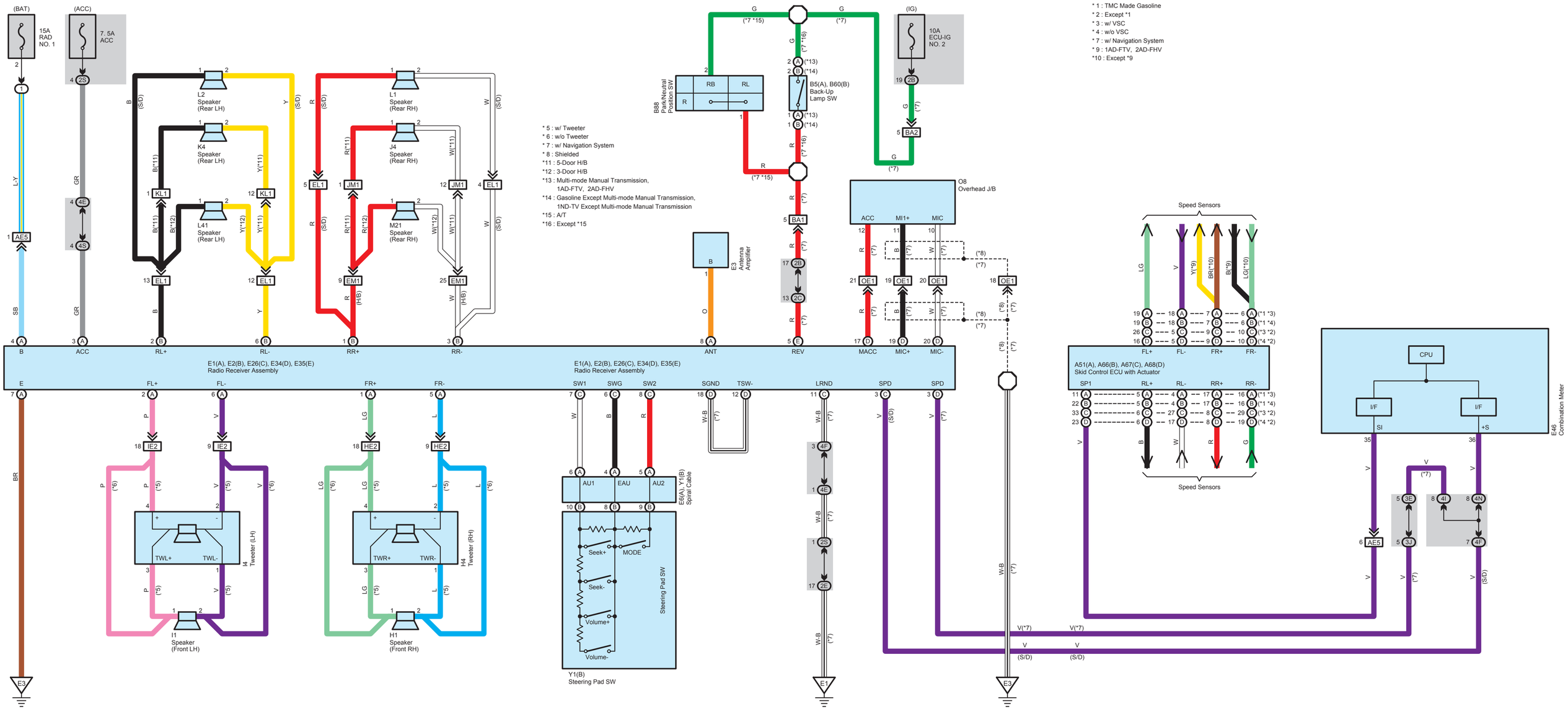
(BAT)
15A RAD NO. 1
(ACC)
7.5A ACC
(IG)
10A ECU-IG NO. 2
L2 Speaker (Rear LH)
K4 Speaker (Rear LH)
L41 Speaker (Rear LH)
L1 Speaker (Rear RH)
J4 Speaker (Rear RH)
M21 Speaker (Rear RH)
R88 Park/Neutral Position SW
B5(A), B60(B) Back-Up Lamp SW
E3 Antenna Amplifier
O8 Overhead J/B
* 5 : w/ Tweeter
* 6 : w/o Tweeter
* 7 : w/ Navigation System
* 8 : Shielded
*11 : 5-Door H/B
*12 : 3-Door H/B
*13 : Multi-mode Manual Transmission, 1AD-FTV, 2AD-FHV
*14 : Gasoline Except Multi-mode Manual Transmission, 1ND-TV Except Multi-mode Manual Transmission
*15 : A/T
*16 : Except *15
* 1 : TMC Made Gasoline
* 2 : Except *1
* 3 : w/ VSC
* 4 : w/o VSC
* 7 : w/ Navigation System
* 9 : 1AD-FTV, 2AD-FHV
*10 : Except *9
Speed Sensors
E1(A), E2(B), E26(C), E34(D), E35(E) Radio Receiver Assembly
A51(A), A66(B), A67(C), A68(D) Skid Control ECU with Actuator
CPU
I/F
E46 Combination Meter
I1 Speaker (Front LH)
H1 Speaker (Front RH)
I4 Tweeter (LH)
H4 Tweeter (RH)
E6(A), Y1(B) Spiral Cable
Steering Pad SW
Seek+
MODE
Seek-
Volume+
Volume-
Y1(B) Steering Pad SW