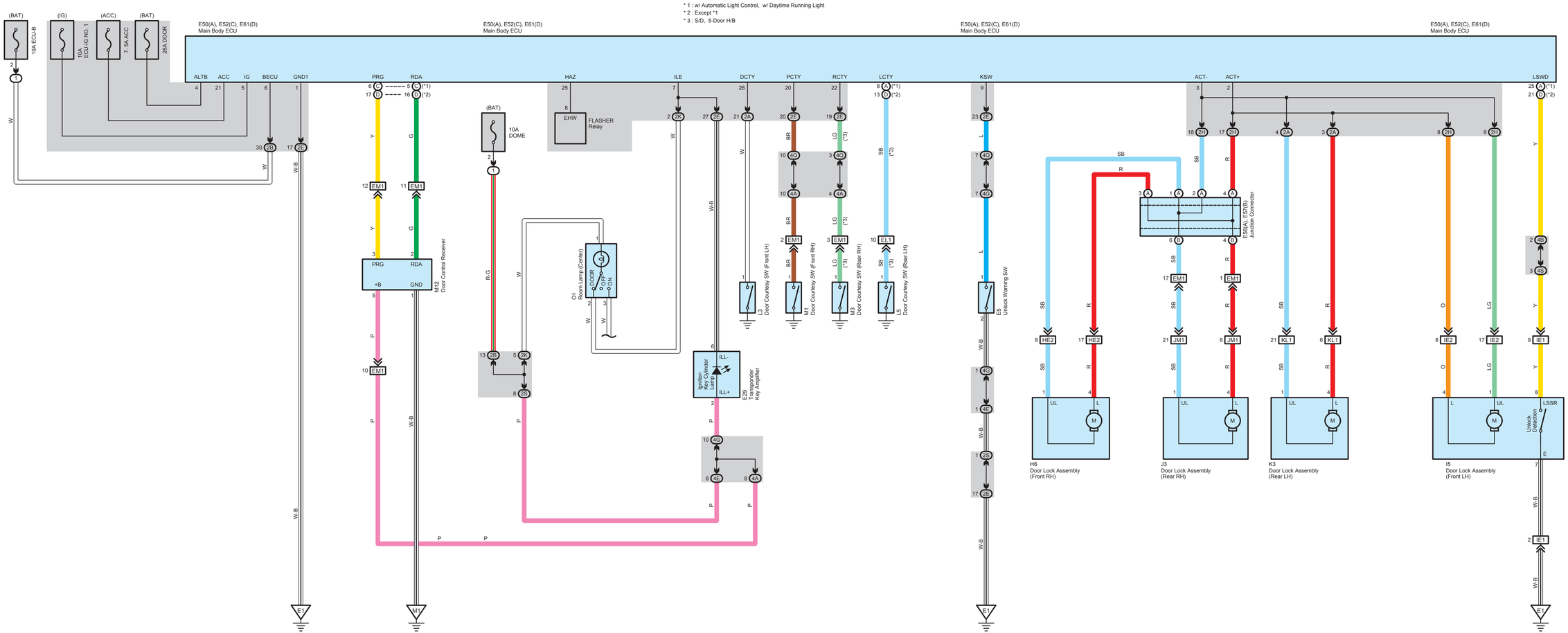

* 1 : w/ Automatic Light Control, w/ Daytime Running Light
* 2 : Except *1